LED HIGHBAY 100-240 WATTS - OPT HBG111

أوبتيمال لايت
Optimal Light

OPT HBG-11





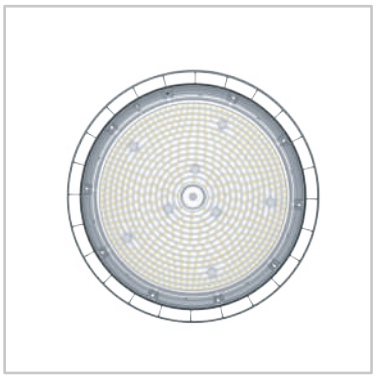



KEY ADVANTAGES

- 180lm/w ultra-high light efficiency
- Wattage from 100W to 240W optional
- Power Selectable (Optional)
- High energy savings compared to systems with traditional discharge lamps
- Robust design
- Emergency lighting with optional battery
- High visual comfort
- No hazardous materials
- Fast ROI thanks to long life span and reduced maintenance
- Compact housing optimised for heat dissipation and reduced dust accumulation
- Dedicated range of mounting accessories

Lit by LUMILEDS

SOSEN

TYPES OF APPLICATION

- CAR PARKS
- LARGE AREAS
- INDUSTRIAL HALLS & WAREHOUSES
- SPORT FACILITIES
- SHOPPING MALLS
- SUPERMARKETS
- FACTORIES

SPORT FACILITIES | CAR PARKS | FACTORIES | INDUSTRIAL HALLS & WAREHOUSES

CE | RoHS COMPLIANT | IK09 | IP65

5 YEARS WARRANTY

IP65 WATERPROOF | CRI 80 | 180 LM/W | 100K Life Hours | Volt 100-277

HBG-11SERIES | CHARACTERISTICS

أوبتيمال لايت
Optimal Light

GENERAL INFORMATION

Driver included	Yes
CE mark	Yes
RoHS compliant	Yes
Safety features	Open circuit protection Short circuit protection Overvoltage protection
Testing standard	LM-79-19(all measurements in ISO17025 accredited laboratory)

HOUSING AND FINISH

Housing	Aluminium
Optic	Polycarbonate
Protector	Polycarbonate (with integrated lenses)
Housing finish	Electrostatic polyester powder coating
Standard colour(s)	RAL 9017 black
Tightness level	IP 65
Impact resistance	IK 09

OPERATING CONDITIONS

Operating temperature range (Ta)	-20°C to + 35°C
Operating Humidity	10-90%RH
Mounting Option	Loop Hanging Bracket Mounting
Warranty	5 years

PERFORMANCE

Power	100W/150W/200W/240W
Efficacy	Up to 190lm/w (Ra70) Up to 180lm/w (Ra80)
Power Efficiency	≥93%
Start Time	≤0.2S
Warm-up time to 60%	0.5S

ELECTRICAL INFORMATION

Electrical class	Class I EU
Nominal voltage	120-277V / 220-240V | 50/60Hz
Power factor (at full load)	0.9
Surge protection options (kV)	6KV-Line-Line 6KV-Line-Earth
Electromagnetic compatibility (EMC)	EN 55015:2019/A11:2020, EN 61000 3-2:2019, EN 61000-3-3:2013, EN 61547:2009, EN 62493:2015
Control protocol(s)	1-10V
Sensor	Motion sensor (optional)
Emergency	Optional auxiliary battery
Total Harmonic Distortion(THD)	IEC 61000-3-2 Class C <20%
Driver Type	Constant current(CC)

For fixed Class 1 luminaires, overvoltage protective devices which comply with IEC 61643-11 shall be disconnected from the circuit.

withstand voltage	1.5KV 60S 10mA

※Lamp switch must control L line or control L and N lines.

OPTICAL INFORMATION

LED Type	SMD2835
Beam Angle	60° / 90° / 120°
Recommended installation height	4m to 12m
Color Tolerance	Ra70 ≤7 Ra80 ≤5
LED colour temperature	3000K / 4000K / 5000K / 5700K / 6500K
Colour rendering index (CRI)	CRI>70 standard CRI>80 optional
Upward Light Output Ratio (ULOR)	0%

※Ra measurement tolerance is ±2.

LIFETIME OF THE LEDS @ TA 25°C

All configurations

L70B50	>100,000h
L80B20	>50,000h
L90B10	>30,000h
Switching Cycles	>100,000 times

※To adjust the power and color temperature, the input power must be turned off.

POWER		LUMENS		EFFICACY	
	100W		19,000LM		190LM/W(Ra70)
			18,000LM		180LM/W(Ra80)
	150W		28,500LM		190LM/W(Ra70)
			27,000LM		180LM/W(Ra80)
	200W		38,000LM		190LM/W(Ra70)
			36,000LM		180LM/W(Ra80)
	240W		45,600LM		190LM/W(Ra70)
			43,200LM		180LM/W(Ra80)

PACKAGING

PACKING & OPTICS & ACC ESSORIES

POWER	PACKAGE SIZE	QTY/CTN	SINGLE PIECE VOLUME	NET WEIGHT	GROSS WEIGHT	20GP	40HQ
100W	L255*W255*H155mm	1PCS/CTN	0.0101m³	1.20kg	1.8kg	2770pcs	6730pcs
150W	L285*W285*H165mm	1PCS/CTN	0.0130m³	1.27kg	1.9kg	2150pcs	5230pcs
200W	L315*W315*H165mm	1PCS/CTN	0.0159m³	1.40kg	2.1kg	1760pcs	4270pcs
240W	L355*W355*H165mm	1PCS/CTN	0.0202m³	1.52kg	2.6kg	1380pcs	3360pcs

LIGHT DISTRIBUTIONS

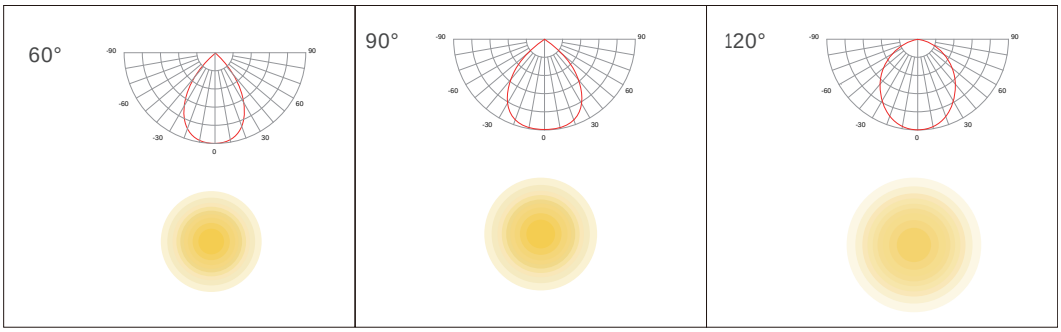

※Sensor-equipped version: 90° only

ACCESSORIES OPTIONAL


Universal Rotatable Bracket


Safety Chain


Motion Sensor


Sosen Led Driver

※The Performance Data is tested base on 230VAC, 90° and 4000K for all versions
※Power Consumption Tolerance ±5% (Apply to all versions)
※Lumen Efficiency Tolerance ±5% (Apply to all versions)

⚠ Connecting the cable requires an IP65 Tightness level

100W

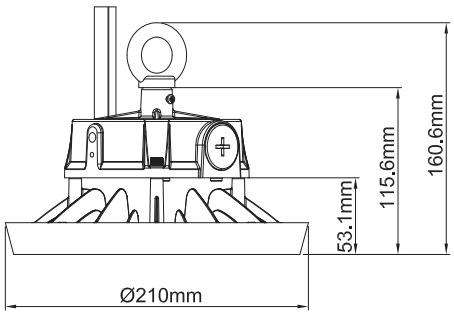

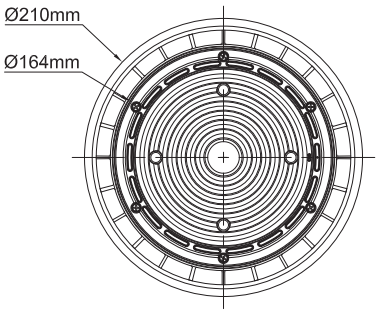

150W

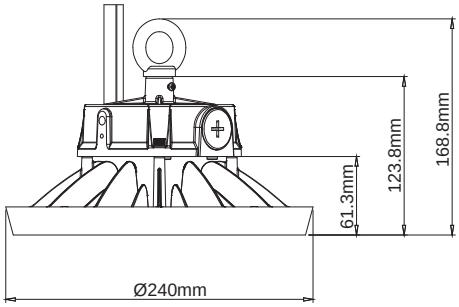

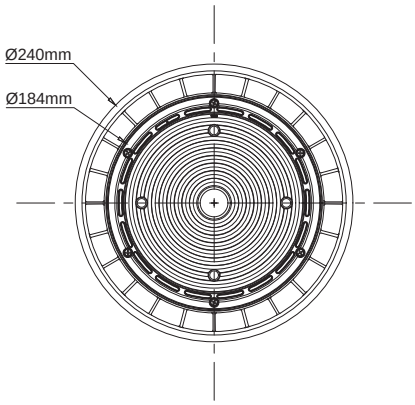

200W

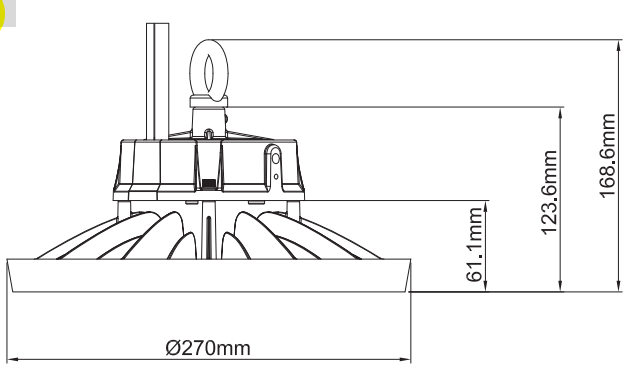

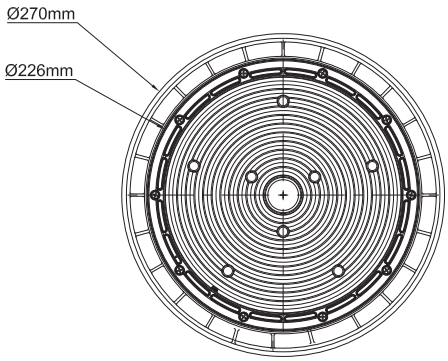

240W

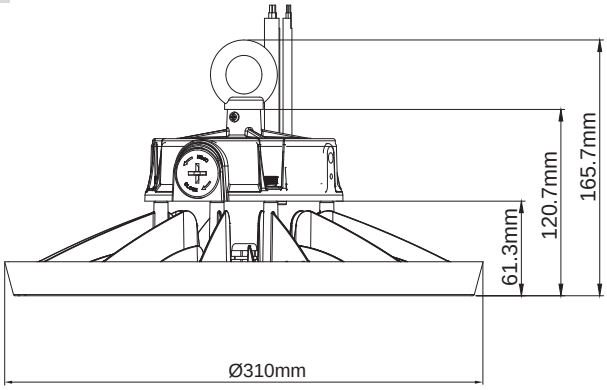

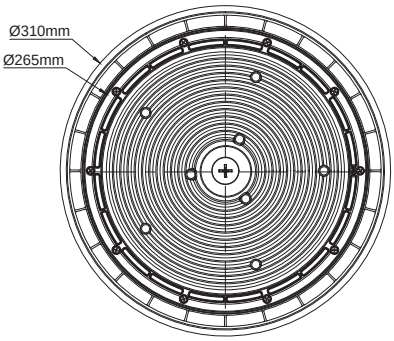

⚠ Connecting the cable requires an IP65 Tightness level

100W

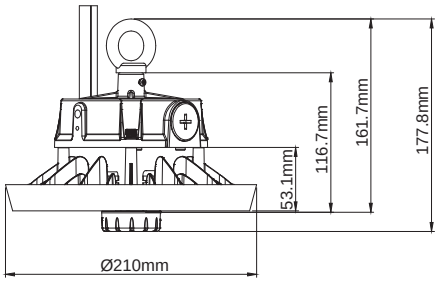

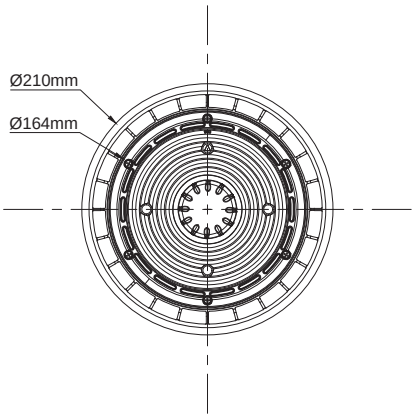

150W

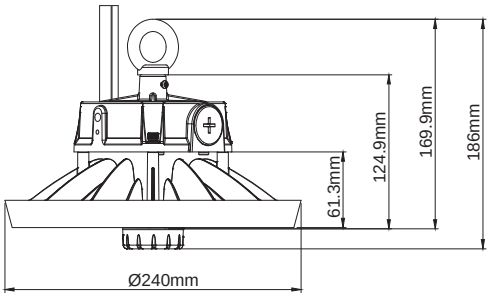

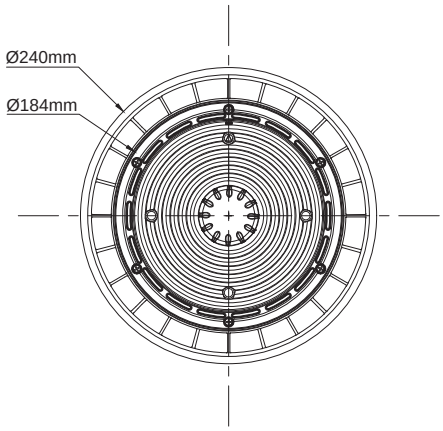

200W

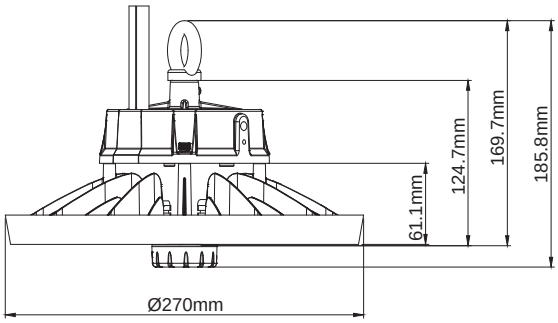

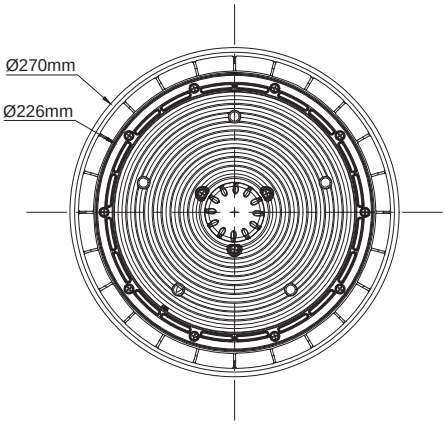

240W

